Table top type noodle boiler

Adopted high power burner! Compact and amazing boiling power!

Anyone can boil and cook professional “Ramen”!

●Adopted high power burner with compact body, realizing great boiling power. ●Burner is surrounded by tank so that heat efficiency is high and keeps heat. ●Over flow water drain is possible at both left and right sides. ●Burner slides and can be easily removed. Cleaning is easy. ●Top plate and boiling tank is SUS304, endurable and sanitary.

MRK-045TB

List Price : ¥139,000
(tax-excluded)

capacity
60 meals/h

※MRK-045TB (Table top type) is match ignition.

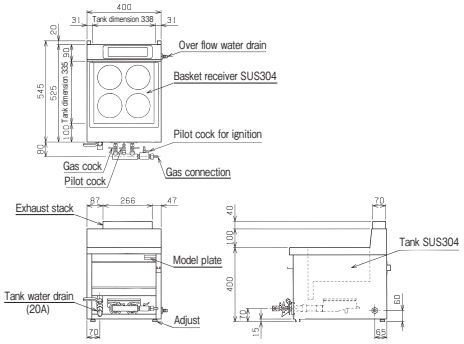

■Table top type noodle boiler Specifications table

Model	External dimension (mm)				Tank quantity	Basket quantity	Tank water amount (ℓ)	Gas consumption		Gas connection		Water drain	Weight (kg)
	Width	Depth	Height	Back				Town gas	LP gas	Town gas	LP gas		
MRK-045TB	400	545 (525)	400	100	1	4	15	12.2kW(10,500kcal/h)	12.2kW(0.88kg/h)	13mm rubber tube mouth	9.5mm rubber tube mouth	20A 14mm rubber tube mouth	24.5

Boiling capacity depends on type and condition of noodle and boiling time.